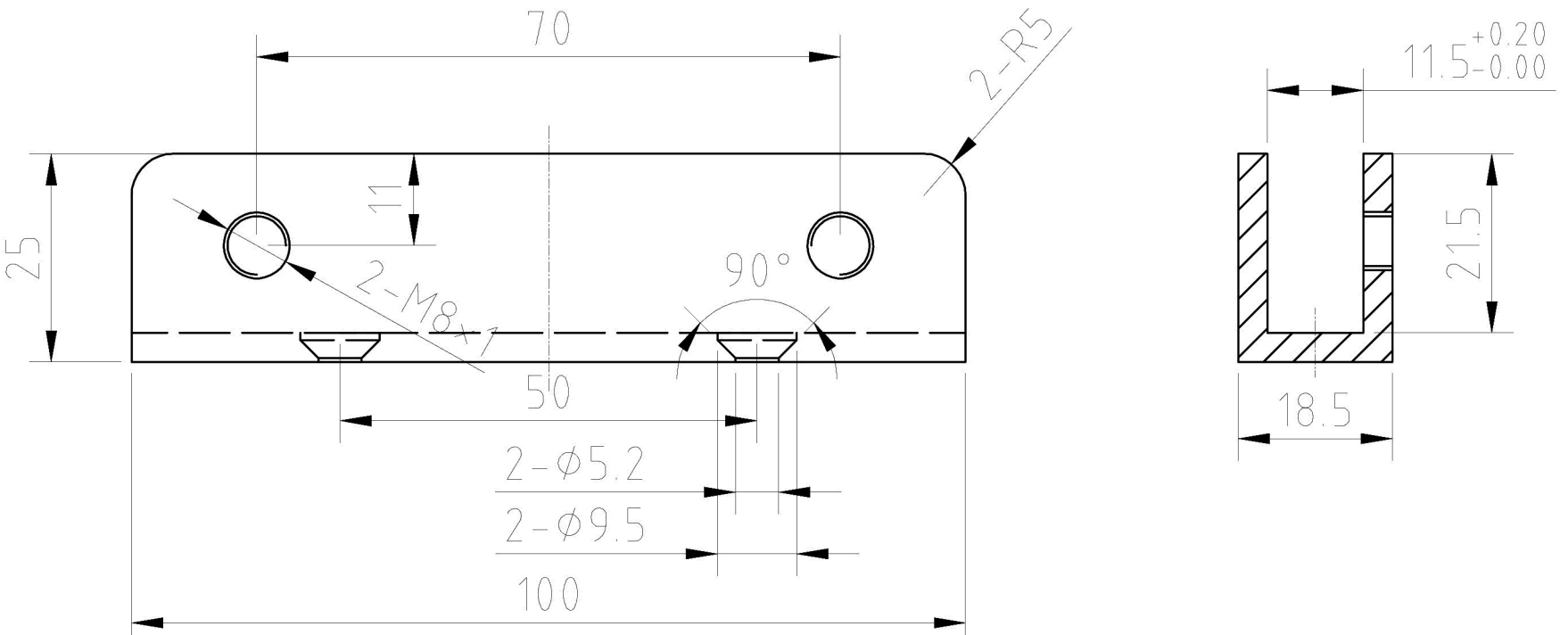
70
2-R5
11.5 +0.20 -0.00
25
11
2-M8×1
90°
21.5
50
18.5
2-Φ5.2
2-Φ9.5
100