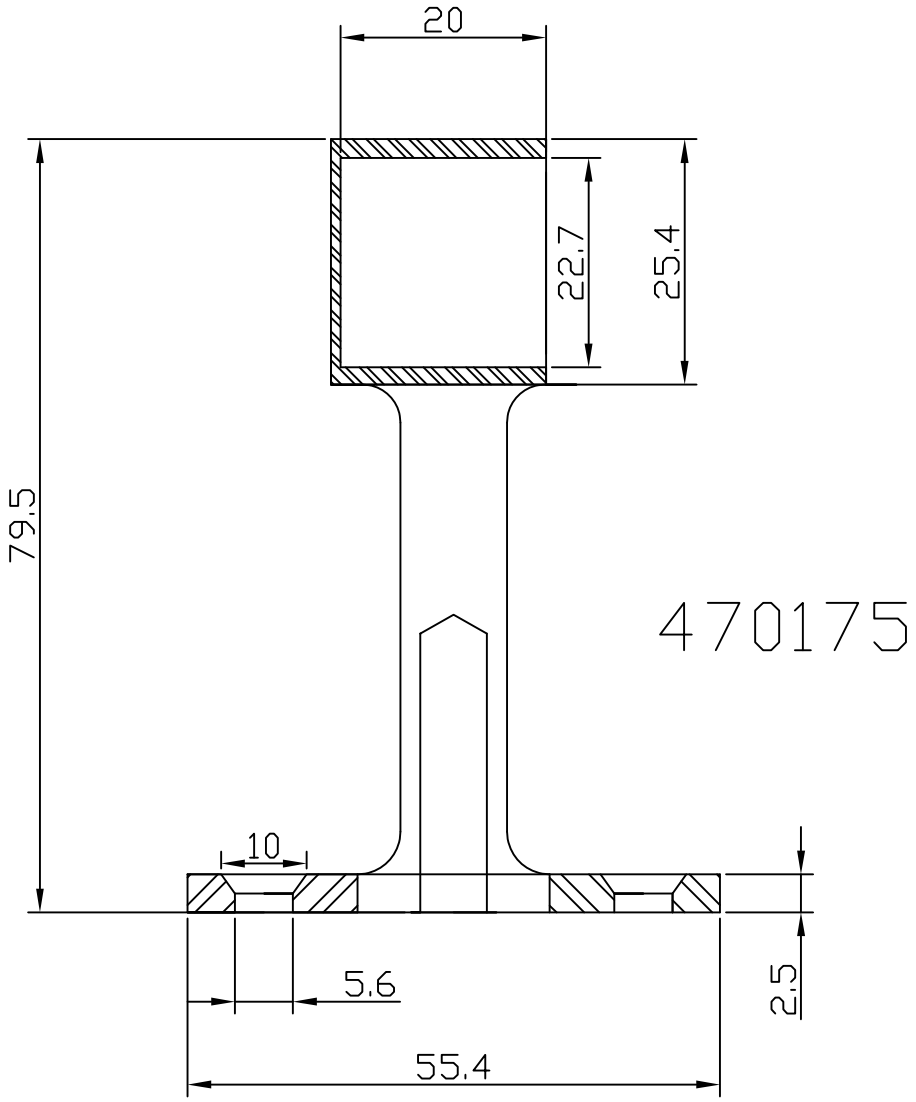
20
22.7
25.4
79.5
470175
10
5.6
2.5
55.4