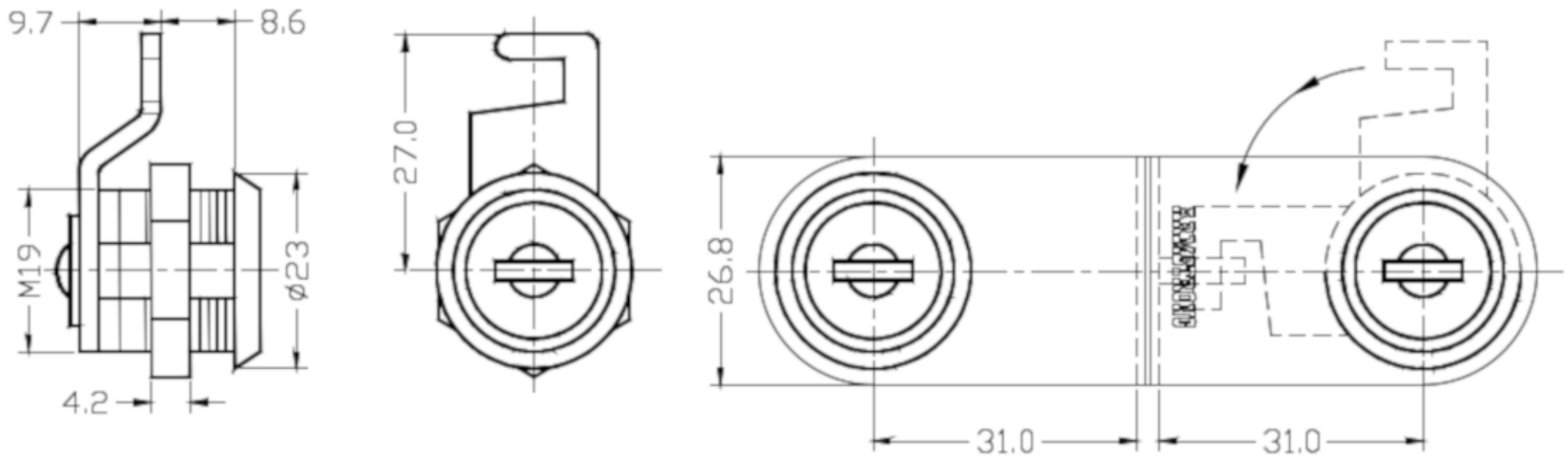
9.7
8.6
M19
ø23
4.2
27.0
26.8
31.0
31.0